Exam Date & Time: 04-Dec-2023 (02:30 PM - 05:30 PM)

MANIPAL ACADEMY OF HIGHER EDUCATION

FIFTH SEMESTER B.TECH. DEGREE EXAMINATIONS - NOVEMBER / DECEMBER 2023
SUBJECT: ECE 3152- LINEAR CONTROL THEORY

LINEAR CONTROL THEORY [ECE 3152]

Marks: 50 **Duration: 180 mins.**

A

Answer all the questions.

Missing data may be suitably assumed.

1A) The open loop transfer function of a unity feedback system is given by $G(s) = \frac{K}{s(s^2+8s+32)}$. Sketch the root locus for the given system and comment on the stability in terms of system gain K (5)

1B) Modify the block diagram shown in Fig.Q1B and develop the closed loop transfer function using block diagram reduction techniques.

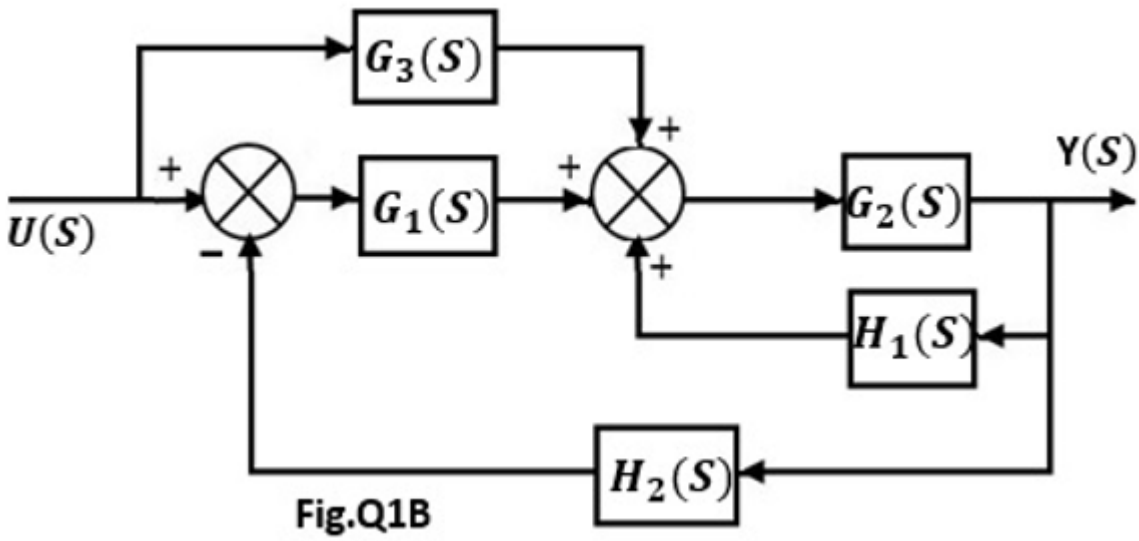

Fig.Q1B (3)

1C) A unity feedback control system is characterized by the following open loop transfer function, $G(s) = \frac{0.4s+1}{s(s+0.6)}$. Determine the maximum overshoot and the corresponding peak time. (2)

2A) Identify the differential equations governing the mechanical behaviour of the system shown in Fig.Q2A. Draw the FI and FV analogous circuits along with mesh and node equations. (5)

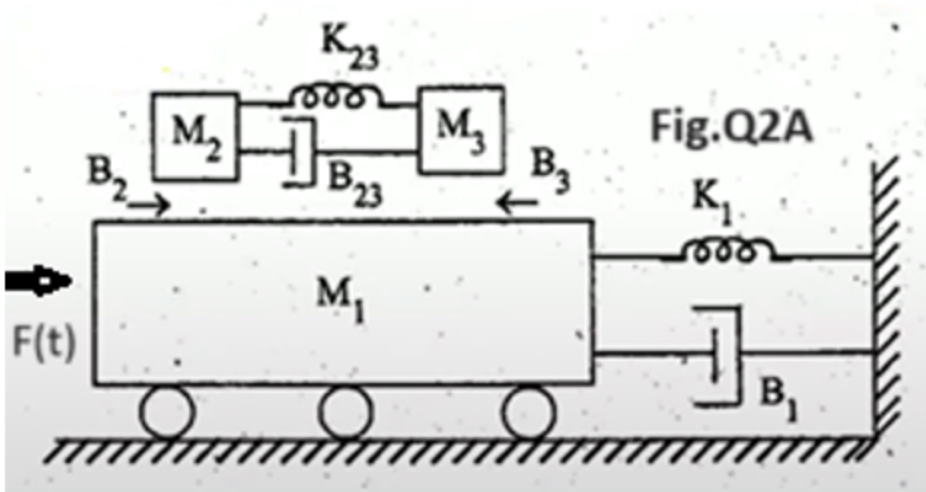

2B) Unit-step response data of a second order system is given below

t (sec)	0	0.05	0.10	0.15	0.20	0.25	0.30	0.35	0.40	0.45	0.50
C(t)	0	0.25	0.8	1.08	1.12	1.02	0.98	0.98	1.0	1.0	1.0

(3)

Calculate the following frequency domain specifications:
i) Resonant peak
ii) Bandwidth
iii) Resonant frequency

2C) A unity feedback system has

$$G(s) = \frac{K}{s(s+1)(0.1s+1)} \text{ and } r(t)=10t.$$ (2)

If K=2, determine $e_{ss}(t)$.

Find the minimum value of K for $e_{ss}(t) \leq 0.1$ for unit ramp input.

3A) Determine the stability of a system with characteristic equation

$S^6+2S^5+8S^4+12S^3+20S^2+16S+16=0$ using Routh Hurwitz criteria (5)

3B) Examine whether the system characterized by the differential equation

$\dddot{Y} + 6\ddot{Y} + 11\dot{Y} + 5Y + U = 0$ is controllable and observable using Kalman's method. (3)

3C) For the system represented by the system matrix $A=\begin{bmatrix} 1 & 1 \\ 0 & 1 \end{bmatrix}$, determine the State Transition Matrix. (2)

4A) Sketch the Nyquist plot for a unity feedback system with

$$\text{OLTF } G(S)H(S) = \frac{20}{S(S+5)}$$ and determine the gain margin. (5)

4B) OLTF of a system is given by $G(S)H(S) = \frac{1}{1+TS}$ Show that there is a 3dB difference between the asymptotic and the actual Bode magnitude plot at corner frequency (3)

4C) Derive an expression for the rise time of a second order underdamped system when subjected to a unit step input (2)

5A) Represent the circuit shown in Fig.Q5A in state space domain using physical variable form considering R_1=200Ω, L_1=400mH, L_2=200mH, C=900μF (5)

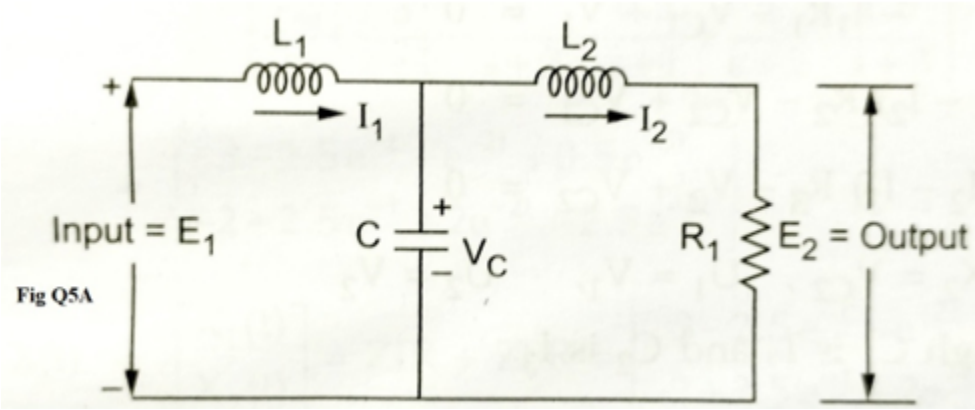

Fig Q5A

5B) A PD controller is cascaded to the forward path of a unity feedback system with plant transfer function $G_P(S) = \frac{4}{S(S+2.5)}$ If the proportional gain is 1, estimate the value of K_D for the system to have a damping ratio of 0.8. Also determine the settling time. (3)

5C) Circuit of a Phase-Lead Compensator is shown in Fig.Q5C where R_1=2kΩ R_2=3kΩ and C= 100μF. Identify the frequency where the maximum phase lead occurs. Also locate pole and zero of the compensator on the S plane. (2)

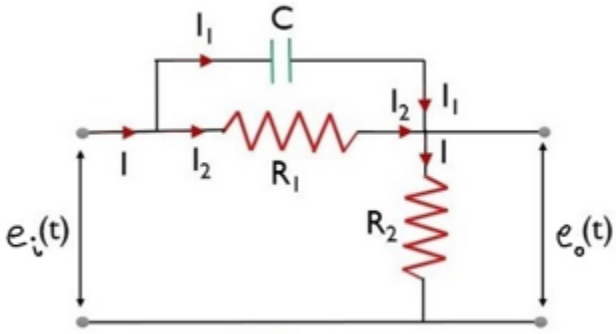

Fig Q5C

-----End-----